Logis M31
Single lever kitchen mixer 260, 1jet
Surfaces: **Chrome** Article Number: **71835003**

Description

product features

- handle can be positioned on the right or left
- ComfortZone 260
- swivel range adjustable in 3 steps 110°, 150° or 360°
- normal spray
- maximum flow rate at 3 bar: 7 l/min
- suitable for continuous flow water heaters

Technology

Eco Smart

Comfort Zone

Product image

Scale drawing

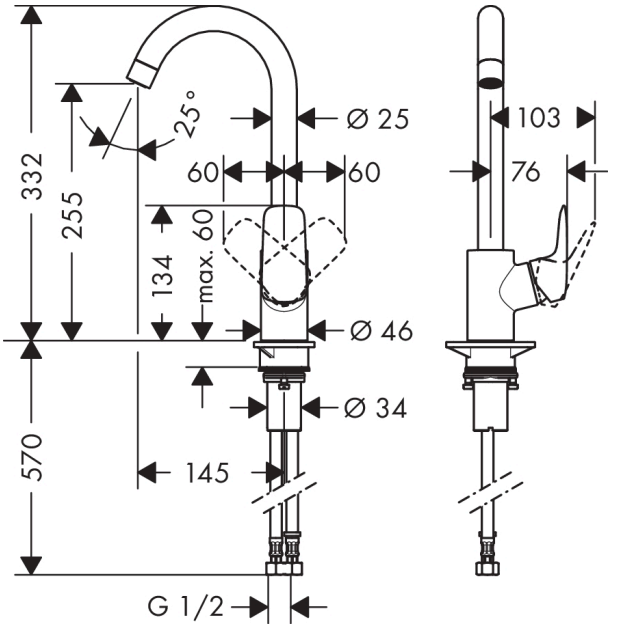
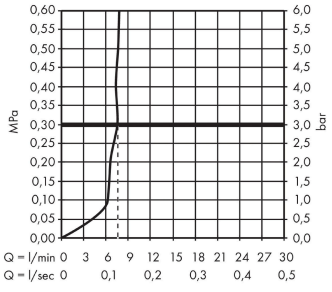
Flowchart